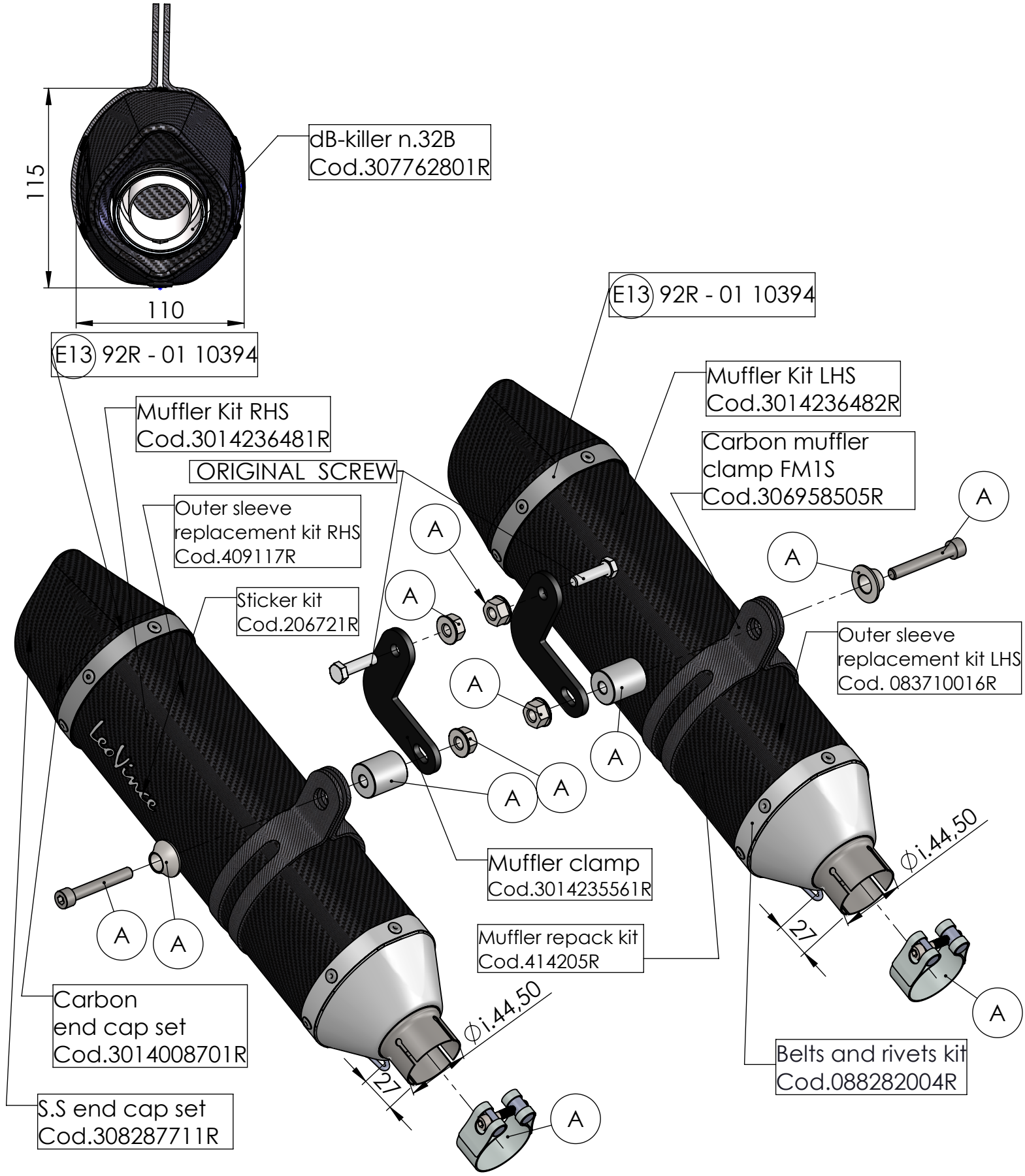


# ART. 14236E SPARE PARTS

TRIUMPH SPEED TRIPLE 1050 RS/S

(A) FITTING KIT Cod. 3014235601R